PUBLISHED: 30-MAR-2017
2022.0 DEFENDER (LE), 307-01

AUTOMATIC TRANSMISSION/TRANSAXLE - VEHICLES WITH: 8HP70 8-SPEED AUTOMATIC TRANSMISSION AWD

TRANSMISSION - TDV6 3.0L DIESEL

(G1976213)

INSTALLATION

44.20.01	GEARBOX - RENEW	3000 CC, TDV6, WITH PARTICULATE FILTER, WITH DIESEL EXHAUST FLUID	7.4	USED WITHINS	
44.20.01	GEARBOX - RENEW	3000 CC, TDV6, WITH PARTICULATE FILTER, WITHOUT DIESEL EXHAUST FLUID	6.7	USED WITHINS	

INSTALLATION

SPECIAL TOOL(S)

transmissionmanuals.com



303-021

303-021

Engine support bracket



E53727

303-1069

Adapter, Wrench



E54554

303-1129

Engine Lifting Brackets

transmissionmanuals.com



303-1497

Left-Hand Rear Engine Lifting Bracket

transmissionmanuals.com

PART(S)

STEP	PART NAME	QUANTITY
Step 3	Transfer case input shaft oil seal	1
Step 25	Transmission fluid cooler tubes to transmission O-ring seals	1

All vehicles

NOTE:

Some variation in the illustrations may occur, but the essential information is always correct.

1.

CAUTION:

Make sure that the torque converter remains in the transmission.

NOTE:

This step is only required if a new component is installed.

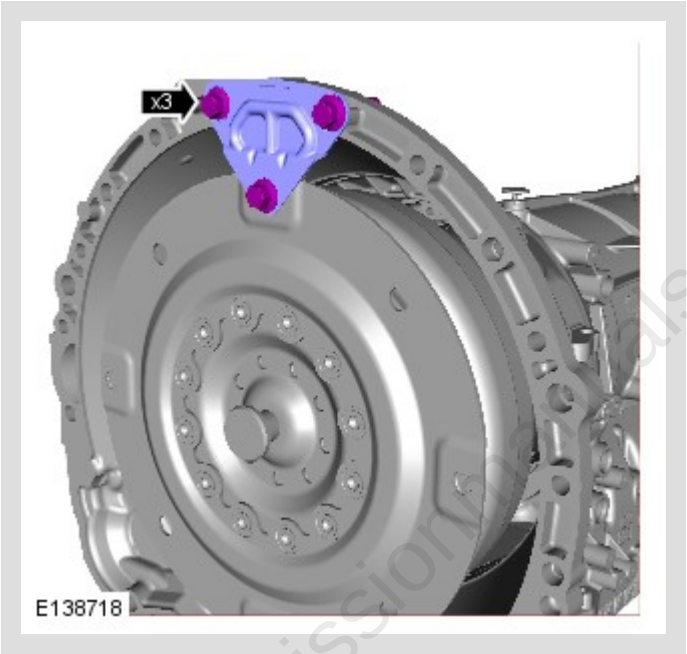

Remove the torque converter retainer.

transmissionmanuals.com

2.

NOTE:

Make sure that the torque converter is fully engaged to the transmission.

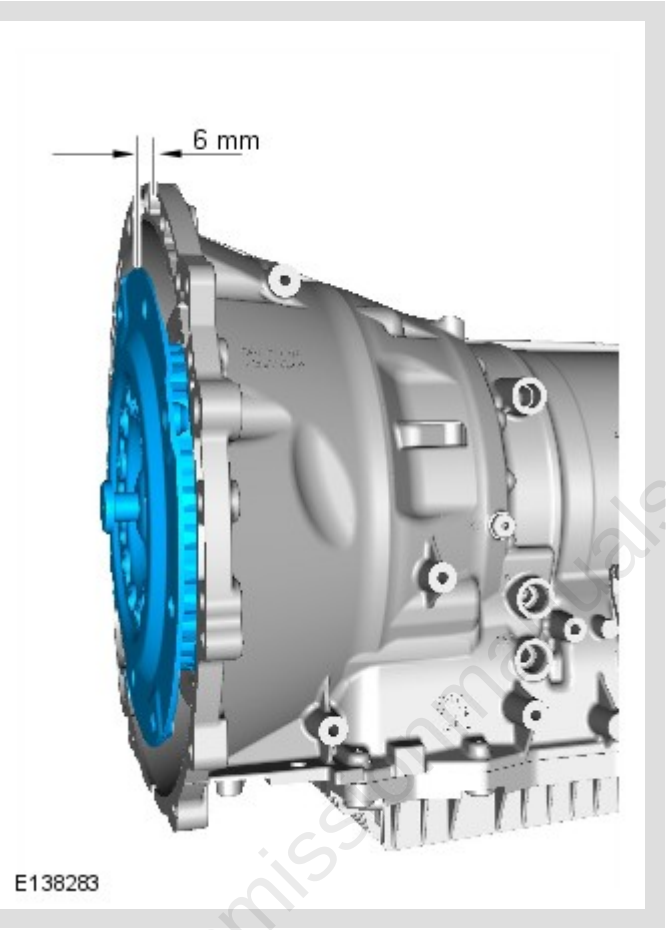

transmissionmanuals.com

3.

NOTE:

This step is only required if previously removed.

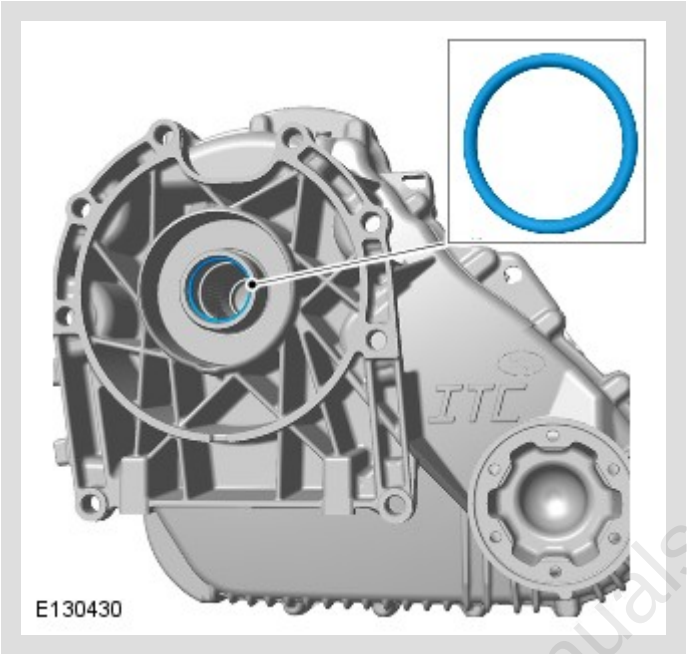

Install a new O-ring seal.

Renew Part: Transfer case input shaft oil seal Quantity: 1 .

transmissionmanuals.com

4.

NOTE:

Clean the component mating faces.

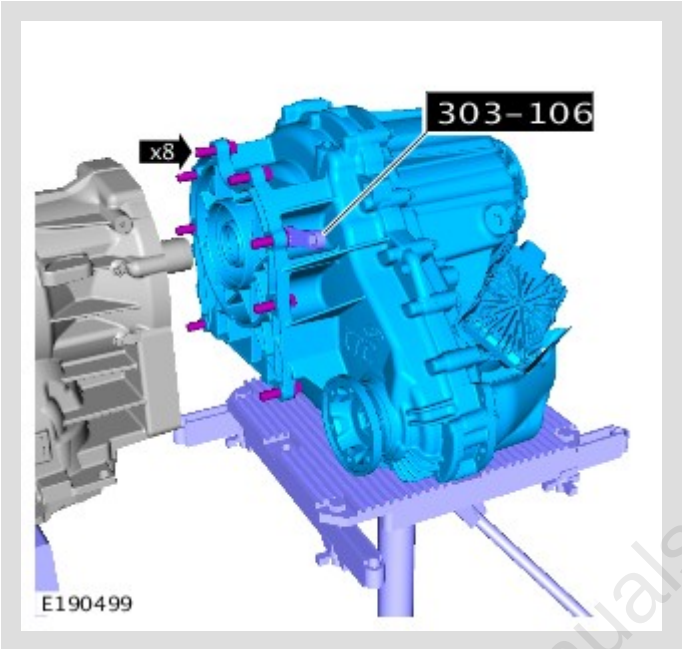

Special Tool(s): 303-1069

Torque: **45 Nm**

5.

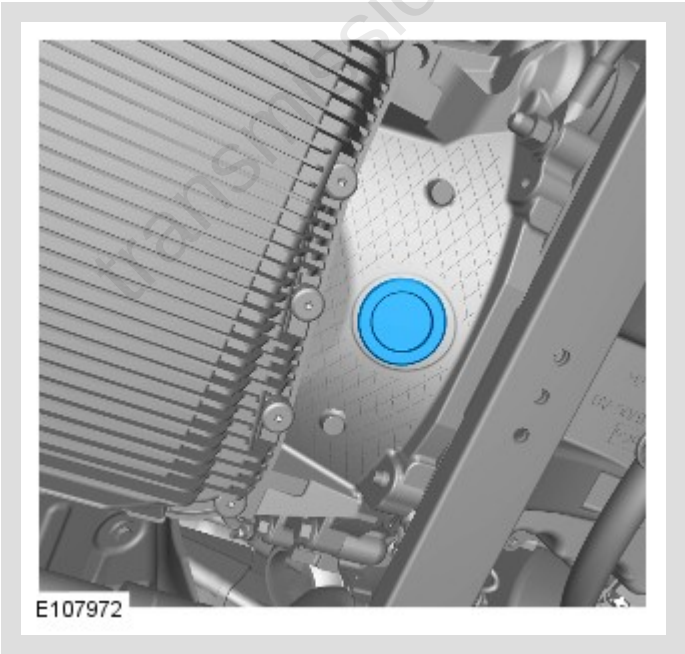

6.

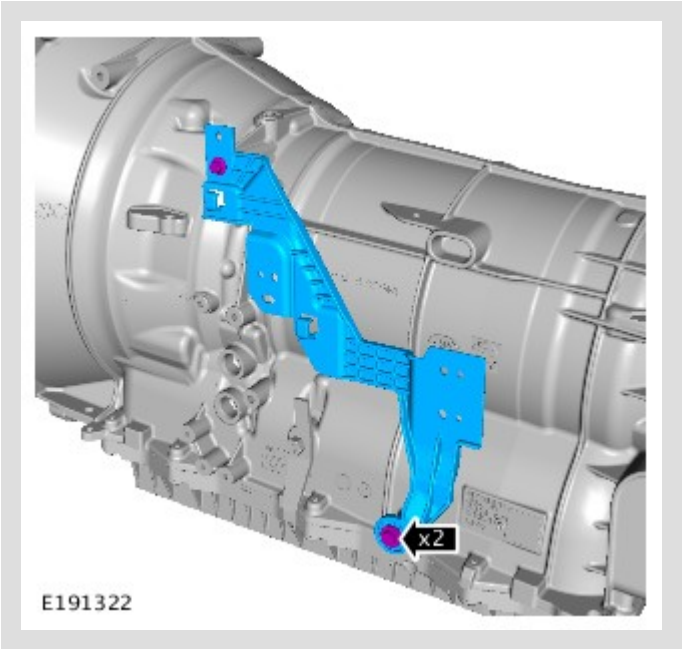

Torque: **9 Nm**

	Vehicles with single speed transfer case

transmissionmanuals.com

1.

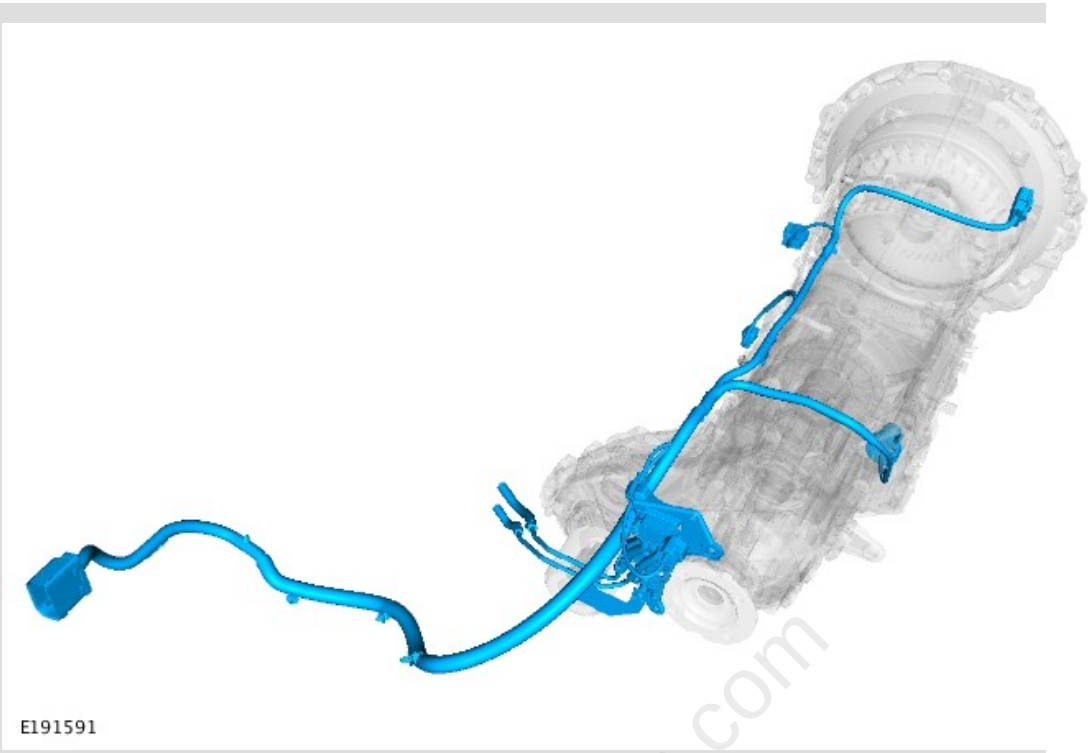

2.

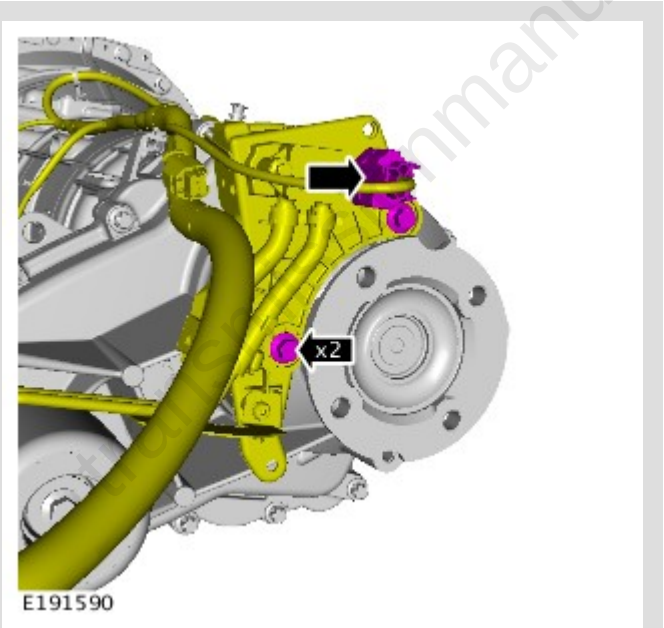

Torque: **10 Nm**

	Vehicles with twin speed transfer case

1.

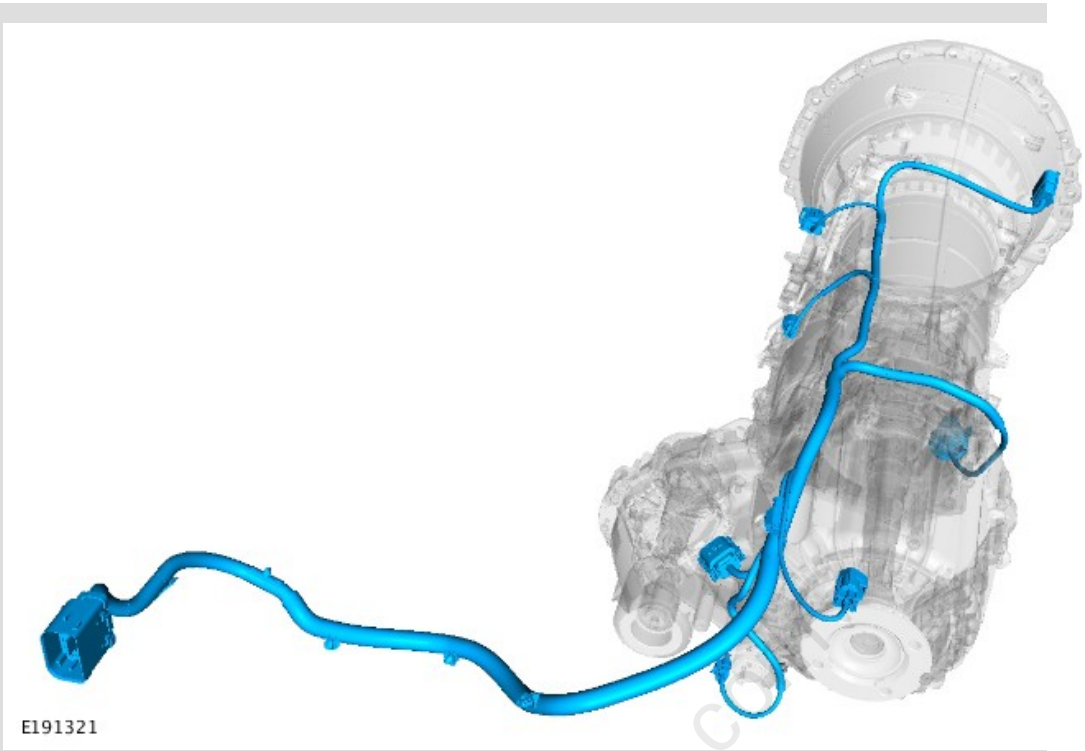

2.

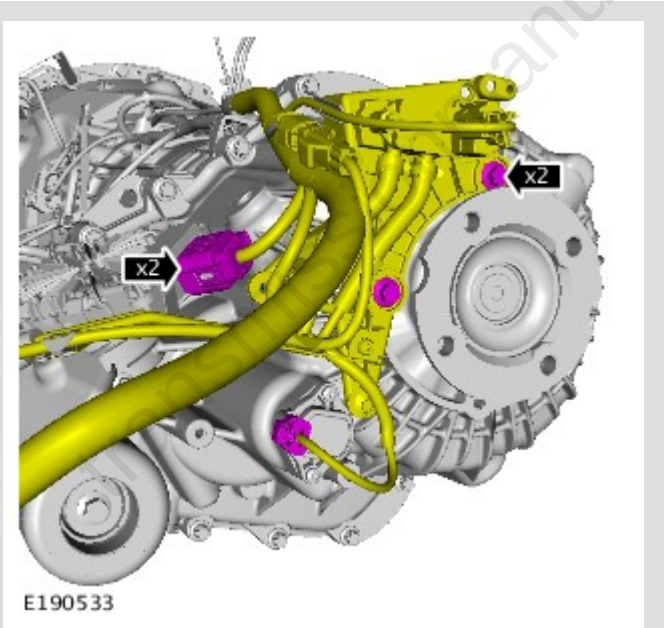

Torque: **10 Nm**

All vehicles

1.

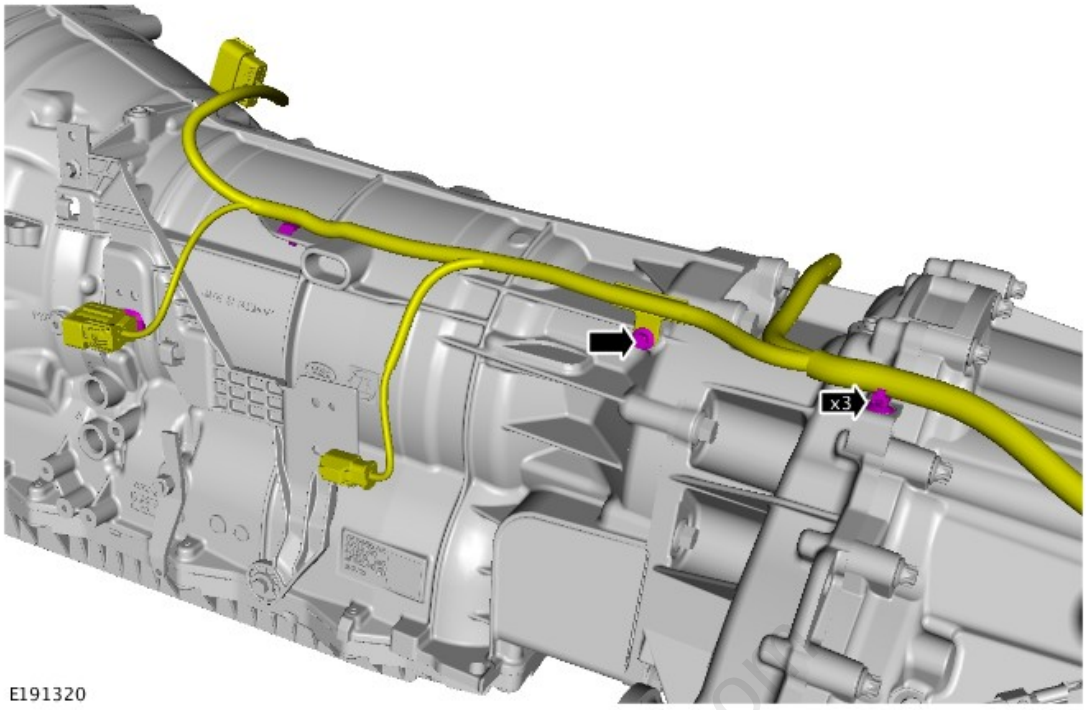

Torque: **10 Nm**

2.

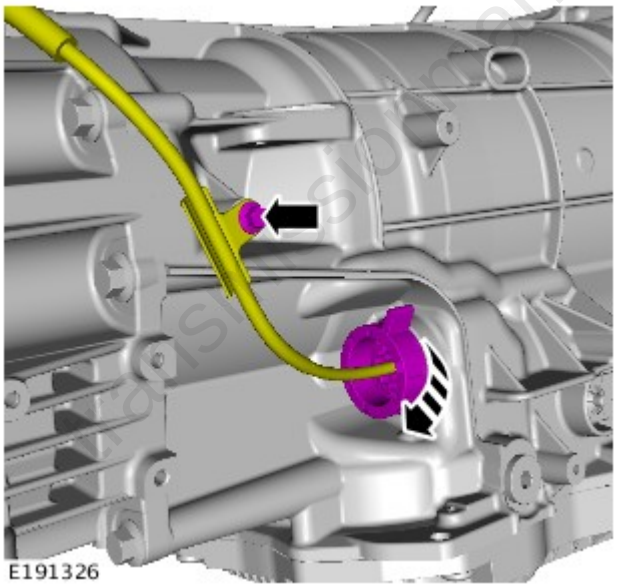

Torque: **10 Nm**

3.

CAUTION:

To prevent water ingress and subsequent transmission damage, make sure that the breather is fully pushed home into the transmission casing. The white line around the circumference of the pipe should not be visible when correctly installed.

NOTE:

This step is only required if previously removed.

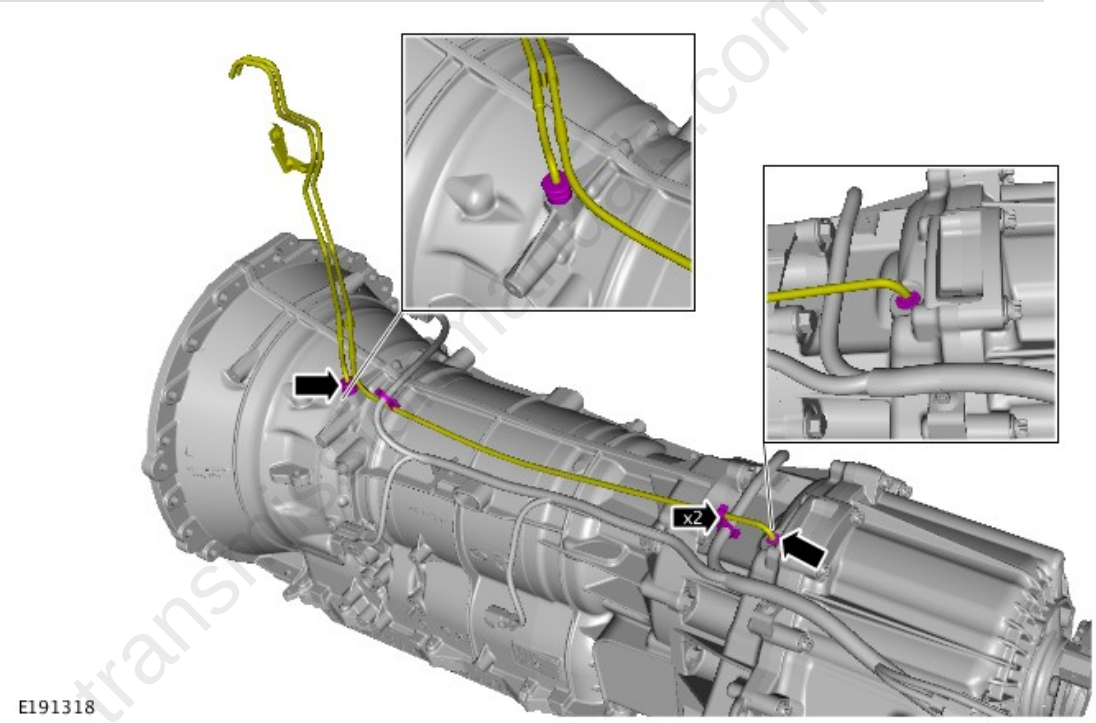

4.

WARNING:

This step requires the aid of another technician.

CAUTION:

Care must be taken to avoid damaging the engine bay wiring harnesses.

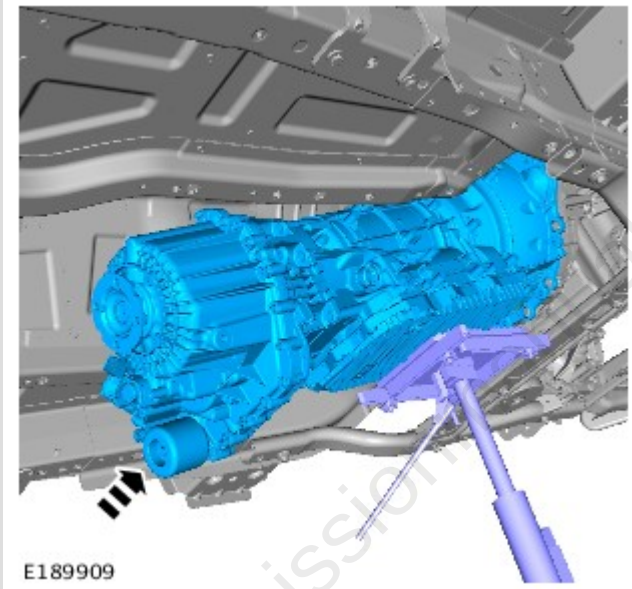

5.

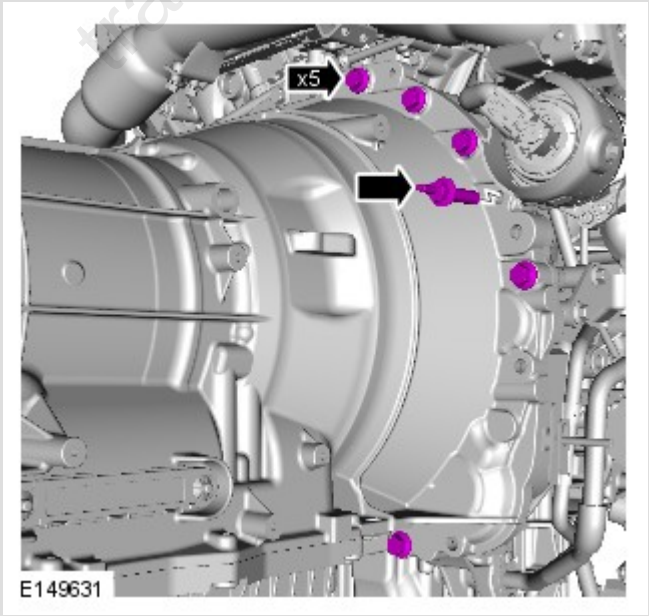

Torque: **40 Nm**

transmissionparts.com

6.

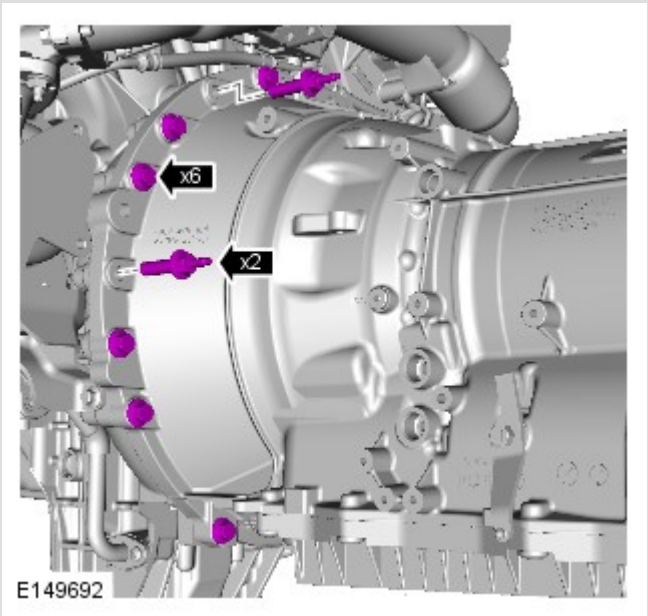

Torque: **40 Nm**

7.

CAUTION:

Only rotate the crankshaft clockwise.

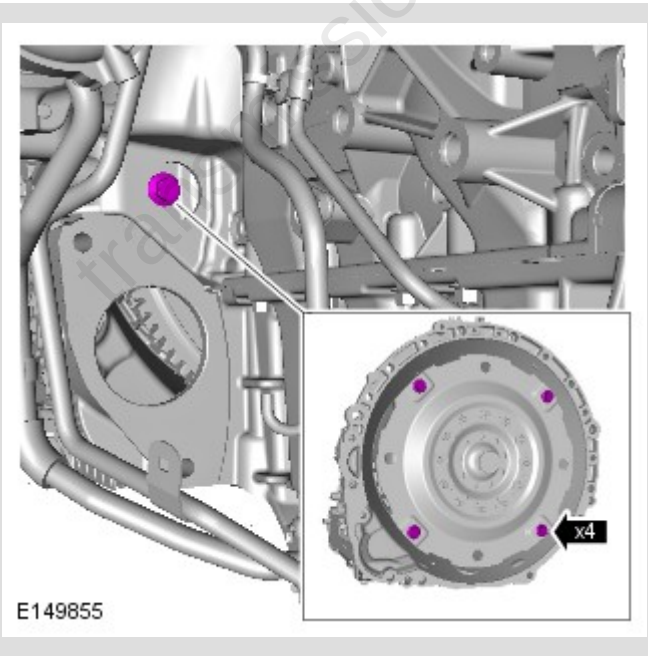

Torque: **70 Nm**

transmissionmanuals.com

8.

WARNING:

Make sure that the transmission is secured with suitable retaining straps.

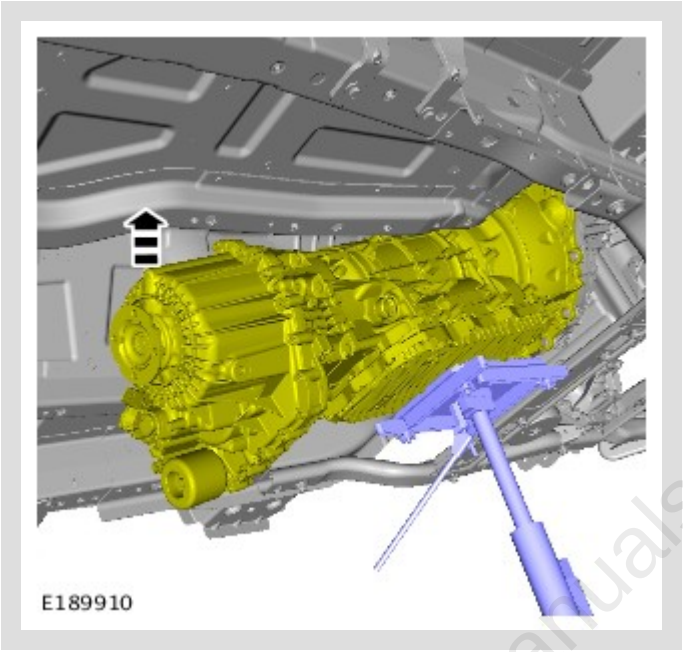

transmissionmanuals.com

9.

CAUTION:

Only rotate the crankshaft clockwise.

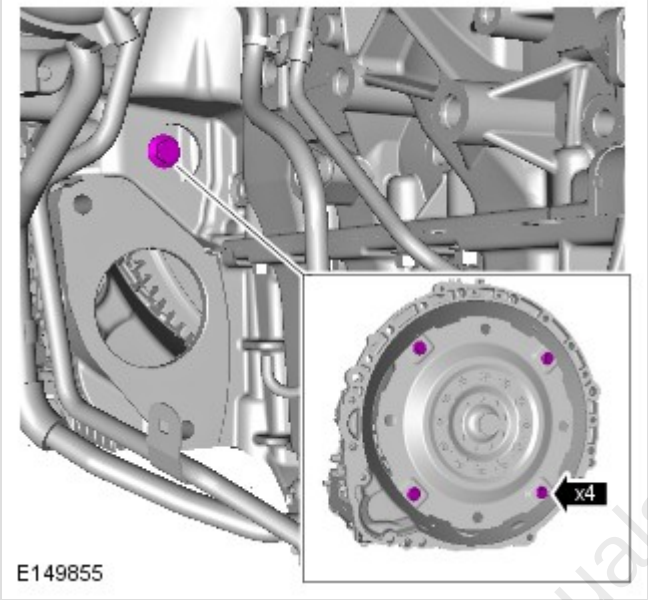

Torque: **70 Nm**

10.

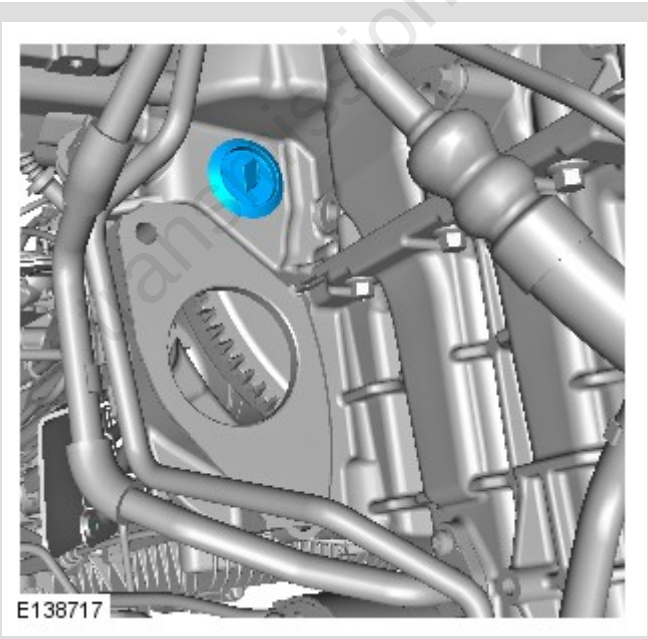

ansmissionmanuals.com

11.

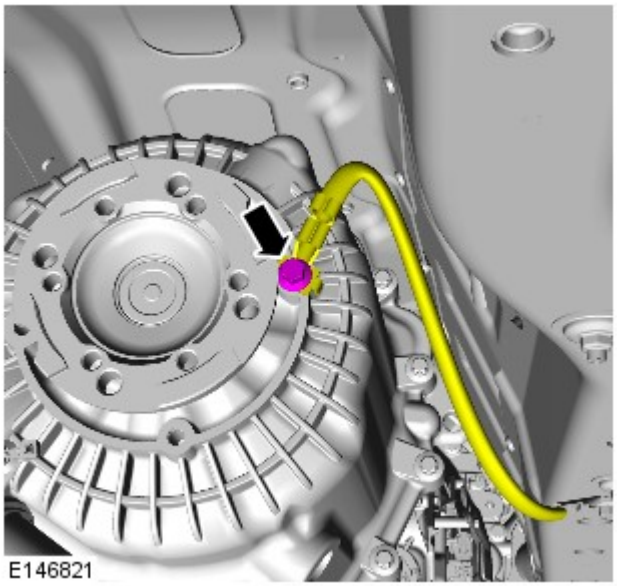

Torque: 25 Nm

12.

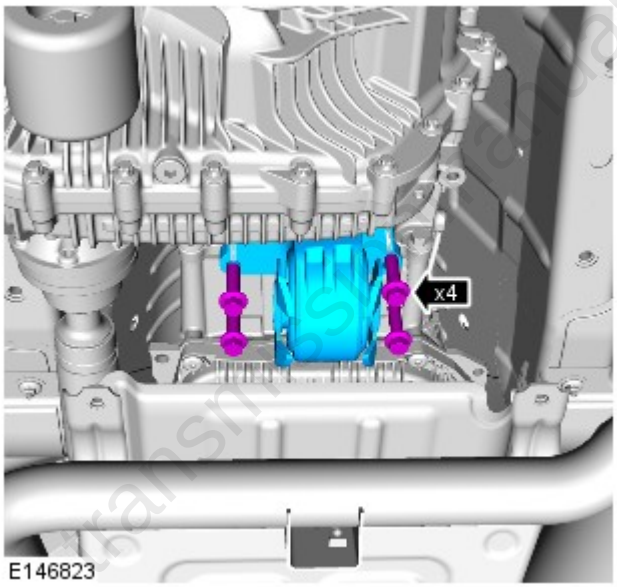

Torque: 60 Nm

13. Install the transmission support crossmember.
Refer to: Transmission Support Crossmember - TDV6 3.0L Diesel (502-02 Full Frame and Body Mounting, Removal and Installation).

14.

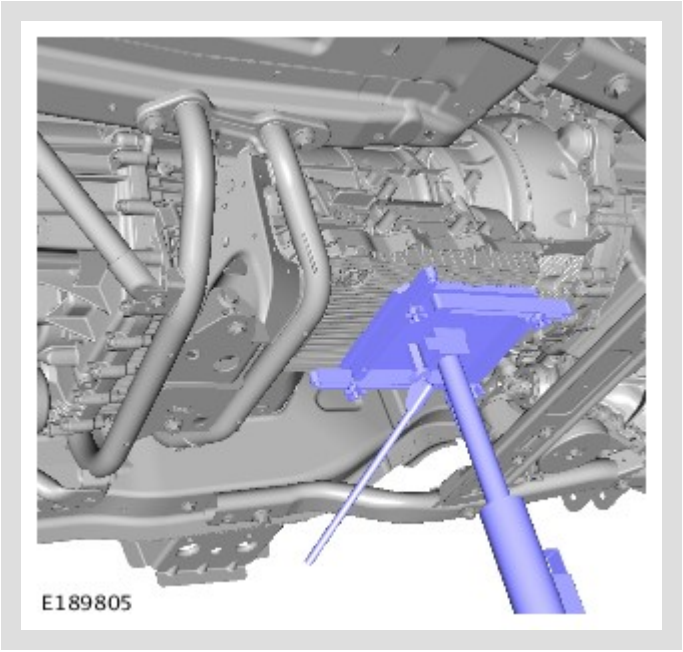

Remove the jack supporting the transmission.

transmissionmanuals.com

15.

WARNING:

Be prepared to collect escaping fluid.

NOTE:

Install new O-ring seals.

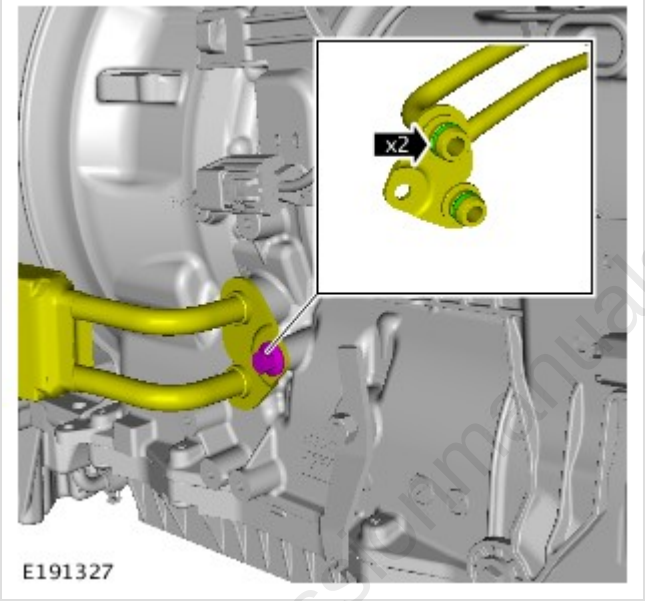

Renew Part: *Transmission fluid cooler tubes to transmission O-ring seals*
Quantity: *1* .
Torque: **22 Nm**

transmissionmanuals.com

16.

NOTE:

Discard cable ties.

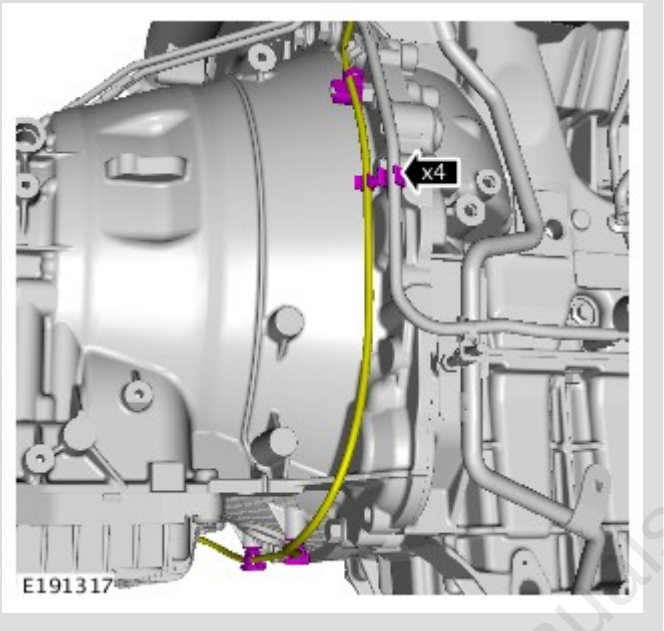

17.

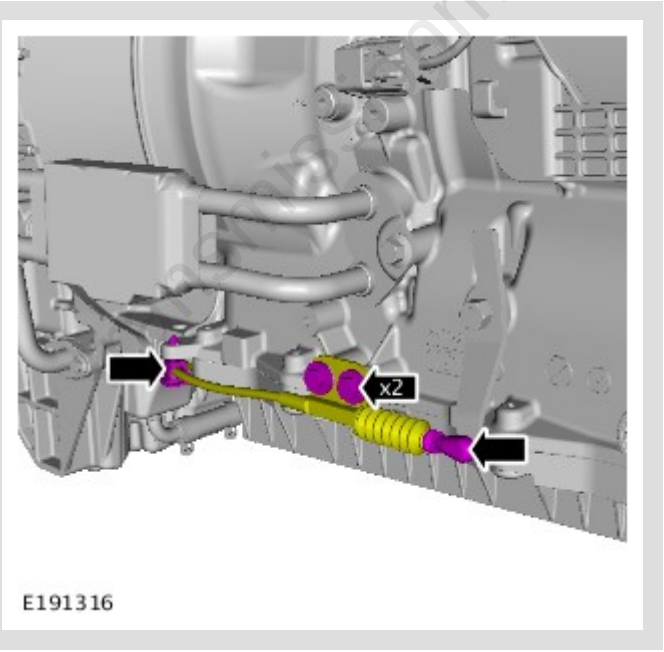

Torque: **11 Nm**

manuals.com

18.

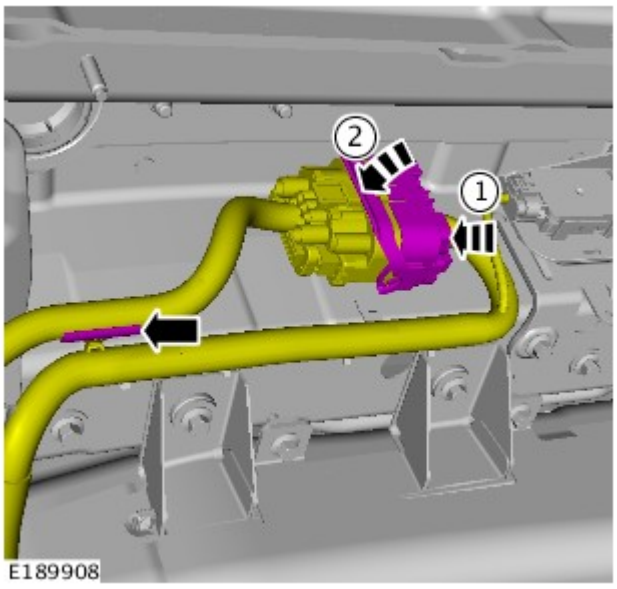

19.

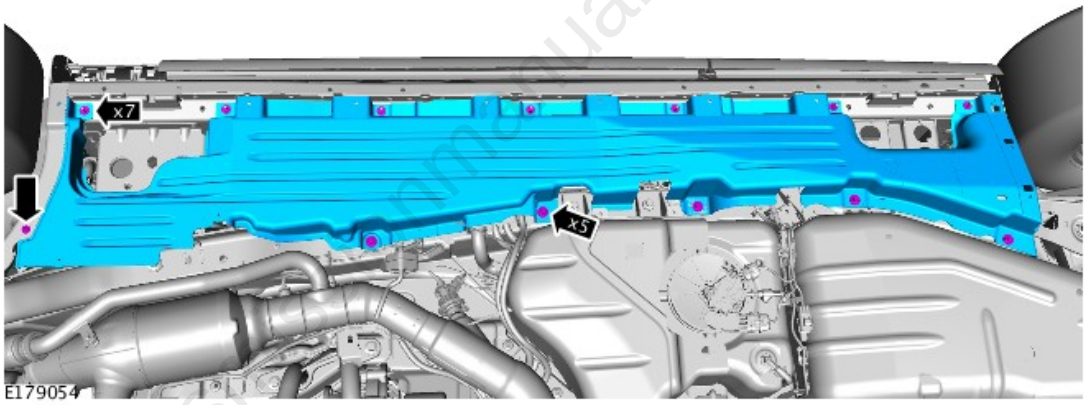

transmanuals.com

20.

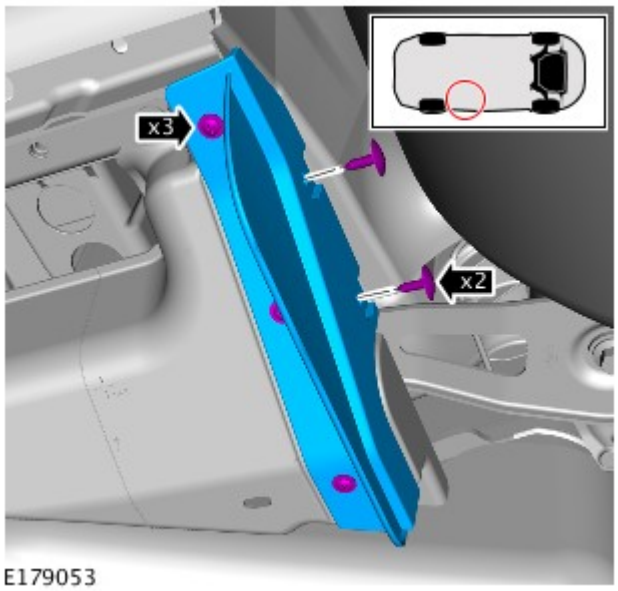

21.

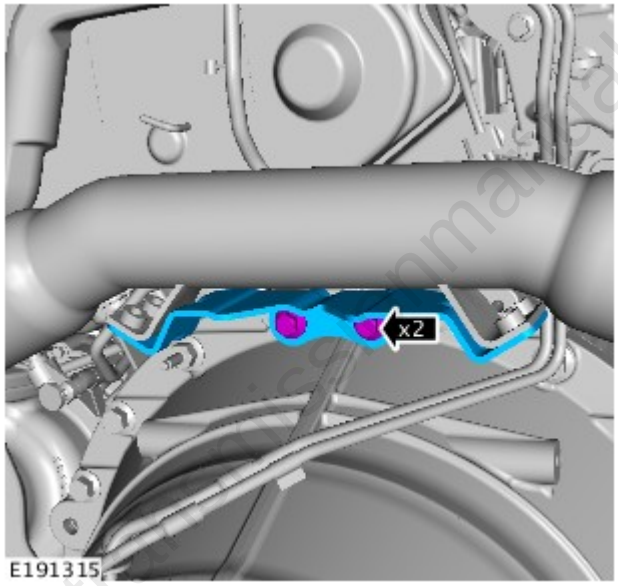

Torque: **23 Nm**

22.

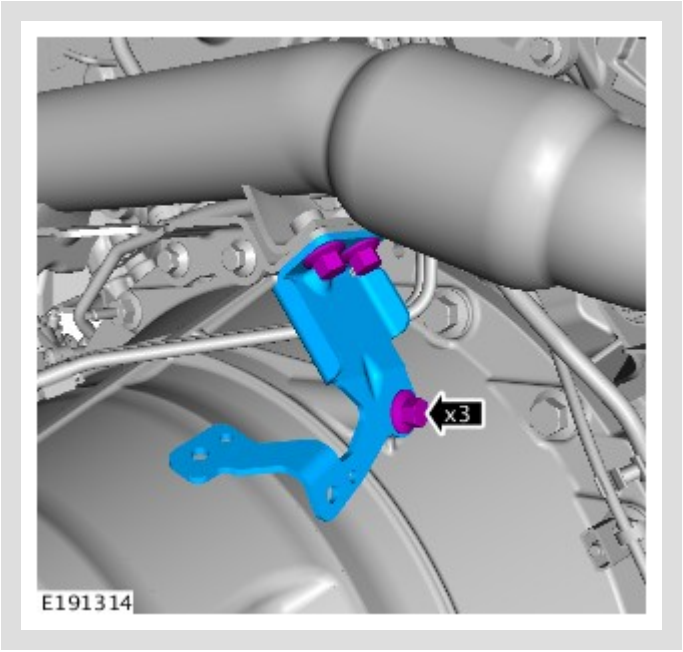

Torque: **23 Nm**

23.

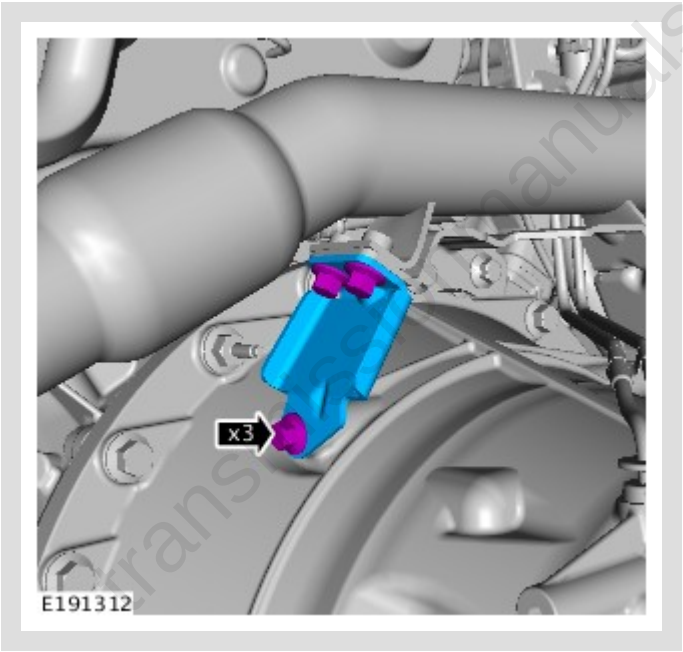

Torque: **23 Nm**

24.

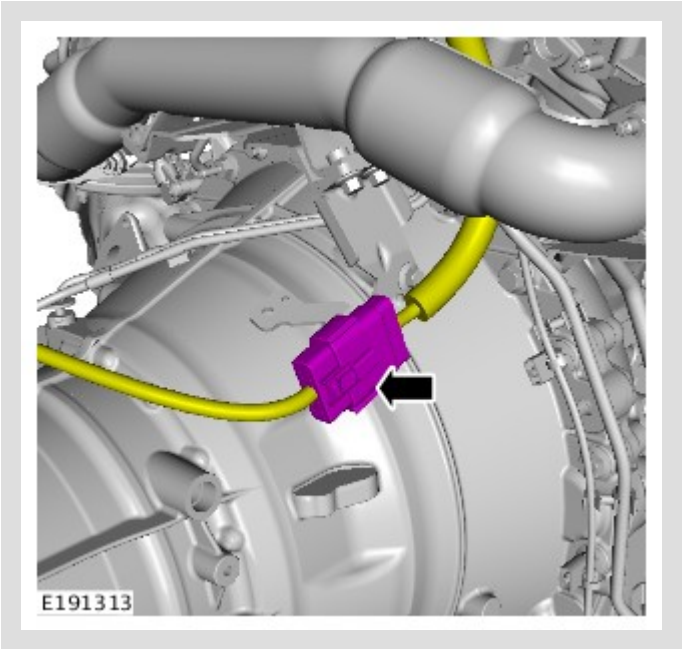

25. Install the rear driveshaft.
Refer to: Rear Driveshaft - TDV6 3.0L Diesel (205-01 Driveshaft, Removal and Installation).

26. Install the front driveshaft.
Refer to: Front Driveshaft - TDV6 3.0L Diesel (205-01 Driveshaft, Removal and Installation).

27. Install the starter motor.
Refer to: Starter Motor (303-06 Starting System - TDV6 3.0L Diesel, Removal and Installation).

transmissionmanuals.com

28.

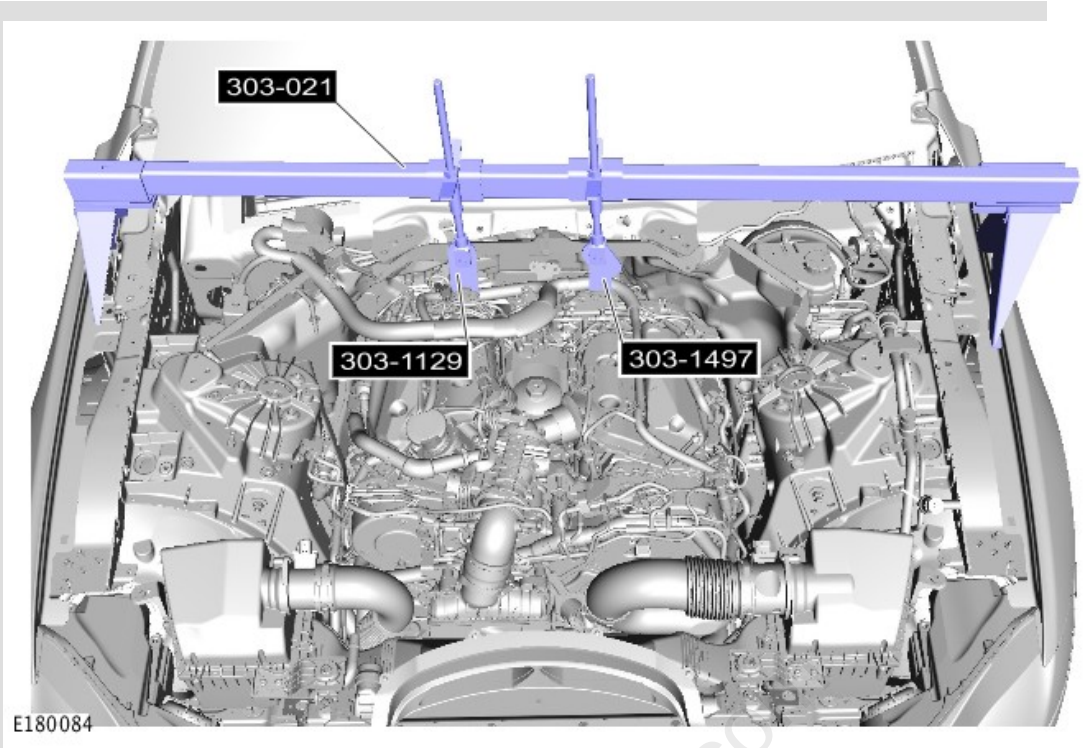

Special Tool(s): 303-021 , 303-1129 , 303-1497

29.

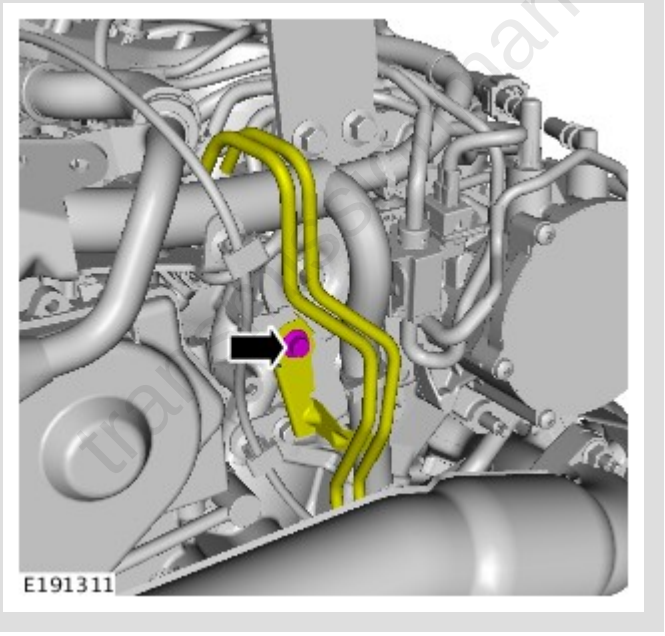

Torque: **12 Nm**

30. Install the secondary bulkhead cetnre panel.
Refer to: Secondary Bulkhead Centre Panel - TDV6 3.0L Diesel (501-02 Front End Body Panels, Removal and Installation).

31. Connect the battery ground cable.
Refer to: Specifications (414-00 Battery and Charging System - General Information, Specifications).

32. Check the transmission fluid level.
Refer to: Transmission Fluid Level Check (307-01 Automatic Transmission /Transaxle - Vehicles With: 8HP70 8-Speed Automatic Transmission AWD, General Procedures).

transmissionmanuals.com